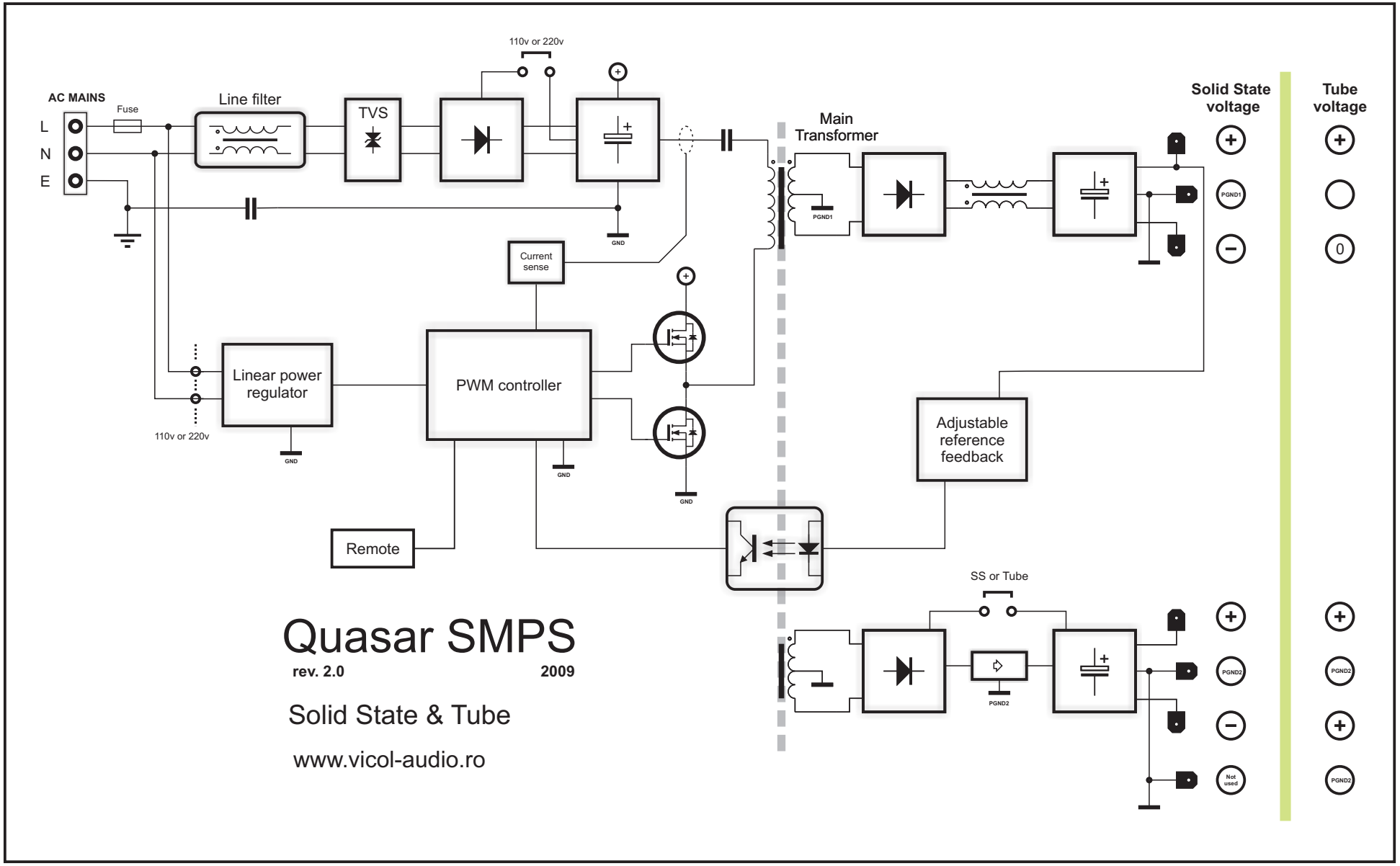
AC MAINS
L
N
E
Fuse
Line filter
TVS
110v or 220v
GND
Current sense
Linear power regulator
110v or 220v
GND
PWM controller
GND
GND
Remote
Main Transformer
PGND1
Solid State voltage
PGND1
Tube voltage
0
Adjustable reference feedback
SS or Tube
PGND2
PGND2
Not used
PGND2
Quasar SMPS
rev. 2.0
2009
Solid State & Tube
www.vicol-audio.ro